REMINGTON®

COOL style

limited edition styling tools

S-1001

Register Your New Product Today!

By registering your new Remington® product, you will receive these important benefits:
Proof of Ownership • Product Protection • Product Registration • Special Offers
Register online at: www.RemingtonProducts.com

IMPORTANT SAFETY INSTRUCTIONS

When using electrical appliances, especially when children are present, basic safety precautions should always be followed, including the following:

READ ALL INSTRUCTIONS BEFORE USING.
KEEP AWAY FROM WATER.

DANGER

As with most electrical appliances, electrical parts are electrically live even when switch is off. To reduce the risk of death by electric shock:

- Always unplug this appliance from the electrical outlet immediately after using.
- Do not use while bathing or in the shower.
- Do not place or store this appliance where it can fall or be pulled into a tub or sink.
- Do not place or drop into water or other liquid.
- Do not reach for an appliance that has fallen into water. Unplug it immediately.
- Unplug this appliance before cleaning it.

WARNING

To reduce the risk of burns, fire, electric shock or injury to persons:

- An appliance should never be left unattended when it is plugged in.
- Close supervision is necessary when this appliance is used by, on, or near children or individuals with certain disabilities or special needs.
- Use this appliance only for its intended use as described in this manual.
- Never operate this appliance if it has a damaged cord or plug, if it is not working properly, if it has been dropped or damaged, or if it has been dropped into water.
- Keep the cord away from the heated surfaces. **Do not wrap the cord around the appliance.**
- Never use while sleeping.
- Never drop or insert any object into any of the appliance's openings.
- Never block the air openings of the appliance or place it on a soft surface, such as a bed or couch, where the air openings may be blocked. Keep the air openings free of lint, hair and the like.
- Do not use outdoors or operate where aerosol (spray) products are being used, or where oxygen is being administered.
- Do not use an extension cord.
- This appliance is hot when in use. Do not let eyes or bare skin touch heated surfaces.
- Do not place the heated unit directly on any surface while it is hot or plugged in.
- The plug on this appliance has one blade wider than the other, it is a polarized plug. As a safety feature, this plug will fit in a polarized outlet only one way. If the plug does not fit fully in the outlet, reverse the plug. If it still does not fit contact a qualified electrician. Do not attempt to defeat this safety feature.
- Always store this appliance and cord in a moisture-free area. Do not store it in temperatures exceeding 140°F (60°C).
- This appliance is for household use only.
- Do not plug or unplug this appliance when your hands are wet.

KEEP AWAY FROM CHILDREN

SAVE THESE INSTRUCTIONS

PRODUCT FEATURES

Thank you for purchasing the Remington® ceramic styler Please carefully read the instructions contained within this booklet, and keep them in a safe place for future reference.

Key Features:
The plates on this high performance straightener contain **Ceramic Technology**. Ceramic protects against damaging hot spots with high, even heat to lock in moisture and create long-lasting styles.

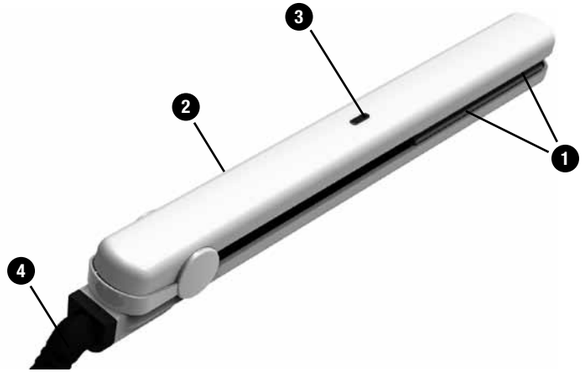

Cool Style Flat Iron Features

1. Ceramic Plates
2. On/Off Switch
3. Power On LED Indicator Light
4. Salon Length Swivel Cord

HOW TO USE

NOTE: DUAL VOLTAGE APPLIANCE
Dual Voltage Use –This appliance contains a special electronic circuit that automatically converts it for worldwide usage-from 120 to 240 volts AC, 50 to 60 Hz. Just plug it into the local outlet and use it as normal; the styler will automatically adjust to the local current. (You may need an adapter to allow the plug to fit into the local outlets, however.)

Confirm the voltage available at each overseas location before using the appliance. For connection to a 240-volt supply, use an attachment plug adapter of the proper configuration for the power supply receptacle.

Heat Settings
Take extra care when using a professional styler. This styler reaches a professional heat of 410°F.

Styling Your Hair
1. Hair should be dry and free of tangles before using the styling iron.
2. Plug the styler into an electrical outlet. Push the ON/ OFF switch forward to turn the unit on. The indicator light will begin to glow.
3. Divide hair into manageable sections and clip the upper layers on top of your head and out of the way. Work with underneath layers first.
4. Take a small section of hair and pull hair down and away from your scalp, and hold it taut.
5. Starting at the roots, clamp hair firmly between the plates and run the styler down the entire hair strand, from root to tip, in one smooth stroke. Do not hold it in one area for a long period of time or damage to hair may occur.
6. To create curves or flicks, rotate your wrist to turn the iron in toward your head or out away from your head as you run the iron down the hair strand.
7. Repeat with all the sections of your hair, working with the underneath layers first, then the top and sides.
8. When you are finished styling, push the ON/OFF switch backward to turn the unit off. The indicator light will turn off. Unplug the unit and allow it to cool before storing.

MAINTENANCE

Cleaning
Make sure the unit is unplugged and cool. Use a damp cloth to clean the plates and the outside of the power handle. No other maintenance of the unit is required.

NOTE: This appliance has no user serviceable parts.

Storage
Unplug the unit whenever it is not in use. Allow it to cool, then store it out of reach of children in a safe, dry location.

Never wrap the cord around the appliance, since this will cause the cord to wear prematurely and break, thus voiding warranty. Handle the cord carefully and avoid jerking, twisting, or straining it, especially at plug connections. If the supply cord is damaged, it must be replaced by the manufacturer, its service agent or similarly qualified persons in order to avoid a hazard.

WARRANTY

Limited Two-Year Warranty
Spectrum Brands, Inc. warrants this product against any defects that are due to faulty material or workmanship for a two-year period from the original date of consumer purchase.

If the product should become defective within the warranty period, we will replace it free of charge. Return your product and sales receipt with your name, address and day time phone number to: Remington Returns Center, 507 Stokely Dr., P.O. Box 1, Deforest, WI 53532. For more information call 800-736-4648 in the U.S.

KEEP ORIGINAL SALES RECEIPT AS PROOF OF PURCHASE FOR WARRANTY PURPOSES.

This warranty does not cover products damaged by the following:
- Accident, misuse, abuse or alteration of the product
- Servicing by unauthorized persons
- Use with unauthorized accessories
- Connecting it to incorrect current and voltage
- Wrapping cord around appliance causing premature wear & breakage
- Any other conditions beyond our control

No responsibility, obligation, or liability is assumed for the installation or maintenance of this product.

SPECTRUM BRANDS, INC. SHALL NOT BE RESPONSIBLE FOR ANY INCIDENTAL, SPECIAL OR CONSEQUENTIAL DAMAGES RESULTING FROM THE USE OF THIS PRODUCT. ALL IMPLIED WARRANTIES, INCLUDING BUT NOT LIMITED TO IMPLIED WARRANTIES OF FITNESS AND MERCHANTABILITY, ARE LIMITED IN DURATION TO TWO YEARS FROM DATE OF ORIGINAL PURCHASE.

This warranty gives you specific legal rights and you may also have other rights which vary from state to state or province to province. Some states do not allow the exclusion or limitation of incidental, special or consequential damages.

Spectrum Brands, Inc. Money-back Offer
If within 30 days after you have purchased your Remington® branded product, you are not satisfied and would like a refund, return it with the sales slip indicating purchase price and date of purchase to the retailer from whom it was purchased. Spectrum Brands, Inc. will reimburse all retailers who accept the product within 30 days from the date of purchase. If you have any questions concerning the money-back guarantee, please call 800-736-4648 in the U.S.

120-240 VAC 60/50Hz

Questions or comments: Call 800-736-4648 in the U.S. or 800-268-0425 in Canada, or visit **www.RemingtonProducts.com**

®Registered Trademark of Spectrum Brands, Inc., or one of its subsidiaries.

©2010 SBI 03/10 Job# CS38182

Spectrum Brands, Inc. Madison, WI 53711
Spectrum Brands Canada, Inc. Mississauga, ON L5L 0A1

Manufactured to Remington's specifications in the PRC.
T22-28664